INSTRUCTIONS

LT-SH-10-PEN226 (all finishes)

Bulb Fitting: E27, Max. 40W, 220-240V~50Hz

IMPORTANT! Please read these instructions fully before attempting to fit this product.

WARNING: ENSURE THE ELECTRICAL SUPPLY TO THE WIRES YOU ARE WORKING ON IS SHUT OFF COMPLETELY; EITHER BY REMOVING THE FUSE OR TURNING OFF THE CIRCUIT BREAKER. TURNING THE POWER OFF USING THE LIGHT SWITCH IS INSUFFICIENT PROTECTION AGAINST ELECTRIC SHOCK.

NOTE: These important safeguards and instructions are not meant to cover all possible conditions or situations that may occur. It must be understood that common sense, caution and care, are factors that must be supplied by the person(s) installing this product.

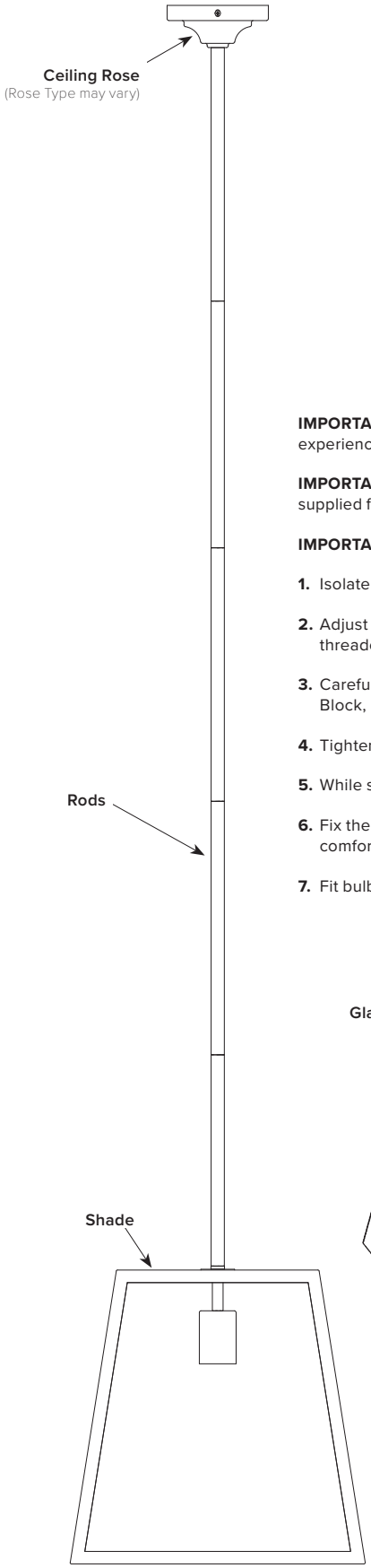

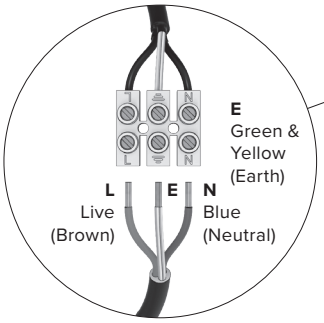

Connection Block Detail

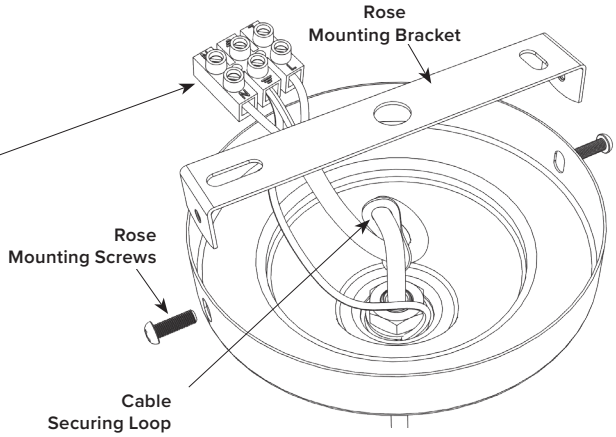

Ceiling Rose Internal View

IMPORTANT: Electric current can kill, always turn off the electricity supply before fitting. It is essential that this light is fitted by an experienced professional.

IMPORTANT: This light must be fixed to a secure structure that will safely bear its weight and from which it cannot become loose. The supplied fixings will not be suitable for all situations, please ensure you use the correct fixings for your building fabric.

IMPORTANT: Please dispose of packaging responsibly.

1. Isolate the mains electricity supply completely before attempting any cable cutting or connecting.
2. Adjust the lamp drop to your desired length by adding or subtracting rods. Attach rods to the light and ceiling rose using the threaded connections.
3. Carefully trim the lamp cable to required length to fit through the rods, allowing enough cable to still fit securely to the Terminal Block, ensuring you can locate the LIVE, EARTH & NEUTRAL after they have been cut.
4. Tighten grub screw or collet at base of rose to ensure cable is held sufficiently, but not so tight as to damage the cable.
5. While supporting the lamp, connect the Connection Block to mains elctrical supply cable.
6. Fix the Rose to Ceiling (or other support surface) using the correct fixings for your substrate, ensuring that they are able to comfortably support the weight of the lamp.
7. Fit bulb and dispose of packaging responsibly.

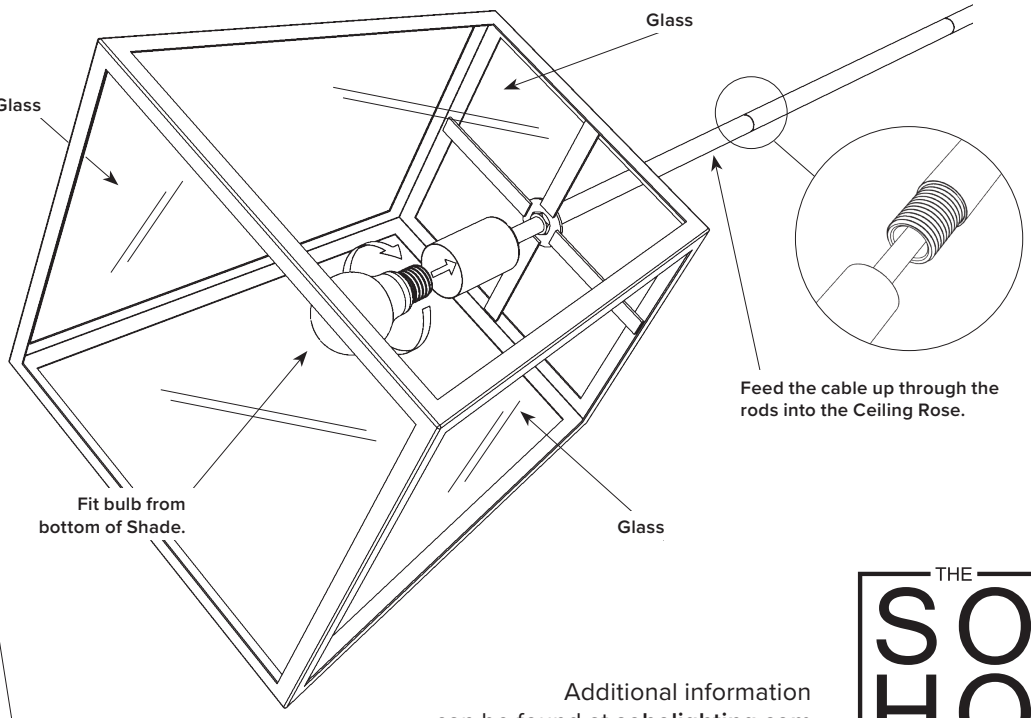

Additional information
can be found at **soholighting.com**
or on request via email: **info@soholighting.com**

THE SOHO LIGHTING COMPANY®